SYMONS STEEL-PLY® SYSTEM IDENTIFICATION CHART

This chart will assist order preparation for all Steel-Ply System components. When placing an order either by mail or by phone, please identify each component by its correct name and Product Code number. Should you have questions about availability of a special product, please contact your Symons Account Manager or Symons Distribution Center.

PANELS & FILLERS

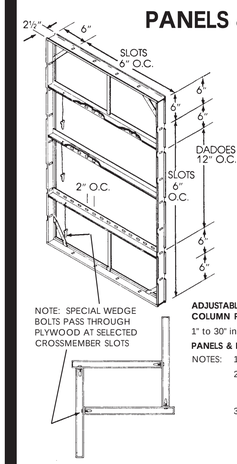

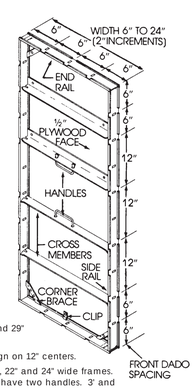

ADJUSTABLE RECTANGULAR COLUMN FORM/FILLER

1" to 30" in 1" increments except 28" and 29"

PANELS & FILLERS

NOTES:
1. Front and rear dadoes align on 12" centers.
2. Handles are added to 20", 22" and 24" wide frames. 5', 6' and 8' length frames have two handles. 3' and 4' lengths have one handle.
3. Filler width may be determined by looking carefully at the end rails. Slots and dadoes are located in 6" increments from each end of the end rail for fillers from 10" to 22". The 4", 5", 6" and 8" fillers do not have slots or dadoes in end rails.

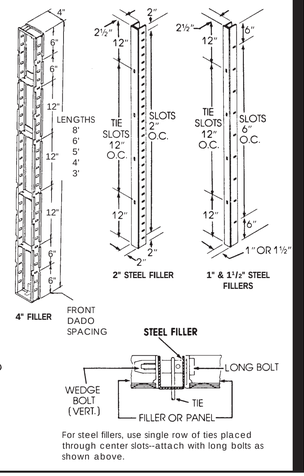

For steel fillers, use single row of ties placed through center slots--attach with long bolts as shown above.

CORNERS

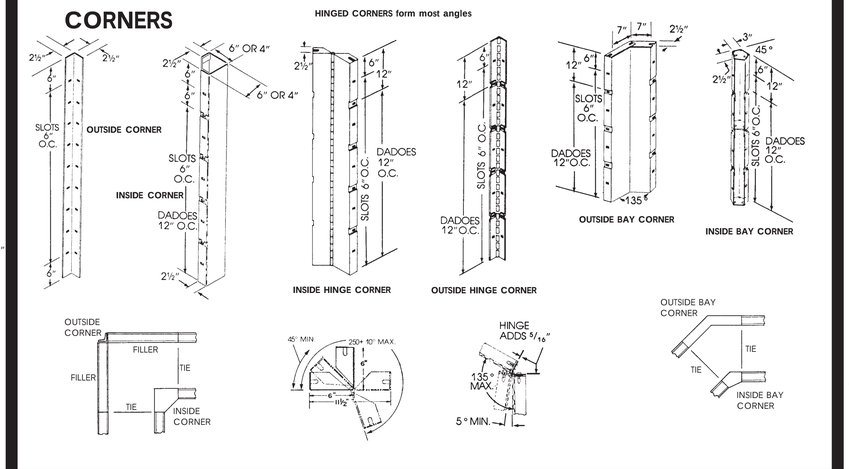

SPECIALTY FORMS

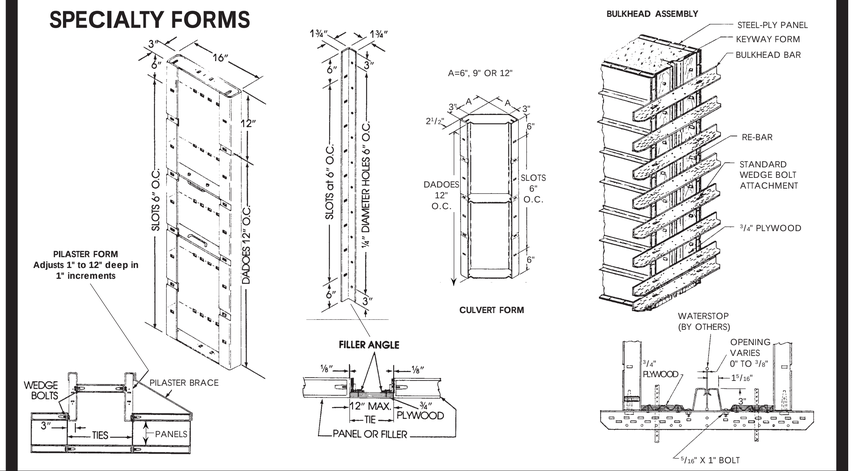

Width	PANELS AND FILLERS																												STEEL FILLERS						CORNERS												CULVERT FORMS													
	30" (Adjustable)		24"		22"		20"		18"		16"		14"		12"		10"		8"		6"		5"		4"		2"		1 1/2"		1"		Outside Corners		4" x 4" Inside Corners		6" x 6" Inside Corners		Inside Hinge Corner		Outside Hinge Corner		Inside Bay Corner		Outside Bay Corner		Pilaster Forms		Filler Angle		12" x 12"		9" x 9"		6" x 6"		Keyway Form		Length
Length	Code	Wt.	Code	Wt.	Code	Wt.	Code	Wt.	Code	Wt.	Code	Wt.	Code	Wt.	Code	Wt.	Code	Wt.	Code	Wt.	Code	Wt.	Code	Wt.	Code	Wt.	Code	Wt.	Code	Wt.	Code	Wt.	Code	Wt.	Code	Wt.	Code	Wt.	Code	Wt.	Code	Wt.	Code	Wt.	Code	Wt.	Code	Wt.	Code	Wt.	Code	Wt.	Code	Wt.	Code	Wt.	Code	Wt.	Code	Wt.	
8'	30098	108	10824	75	10822	70	10820	66	10818	63	10816	59	10814	54	10812	50	10810	46	10808	42	10806	39	10805	37	10804	34	10802	23	10803	21	10801	18	10827	25	60363	44	10825	52	30078	66	30228	20	30018	60	30008	34	10828	86	10826	11	30048	126	30038	100	30028	86	10061	17	8'
6'	30102	81	10624	58	10622	54	10620	50	10618	47	10616	44	10614	40	10612	36	10610	34	10608	32	10606	28	10605	27	10604	25	10602	17	10603	15	10601	13	10627	18	60361	34	10625	40	30076	49	30226	18	30016	46	30006	25	10628	65	10626	8	30046	90	30036	75	30026	62	10062	13	6'
5'	30081	65	10524	48	10522	46	10520	42	10518	39	10516	37	10514	35	10512	33	10510	30	10508	26	10506	25	10505	23	10504	21	10502	15	10503	13	10501	11	10527	14	60360	28	10525	32	30075	41	30225	16	30015	36	30005	20	10528	52	10526	7	30045	75	30035	65	30025	55	10063	10	5'
4'	30094	54	10424	40	10422	38	10420	35	10418	32	10416	30	10414	28	10412	26	10410	24	10408	22	10406	19	10405	20	10404	17	10402	11	10403	10	10401	9	10427	12	60359	22	10425	26	30074	34	30224	12	30014	30	30004	17	10428	42	10426	5	30044	63	30034	50	30024	48	10064	8	4'
3'	30111	41	10324	30	10322	29	10320	27	10318	25	10316	24	10314	22	10312	20	10310	19	10308	17	10306	15	10305	14	10304	13	10302	9	10303	8	10301	7	10327	9	60358	17	10325	20	30073	25	30223	8	30013	23	30003	13	10328	34	10326	4	30043	45	30033	38	30023	31	10065	6	3'

CONNECTING HARDWARE

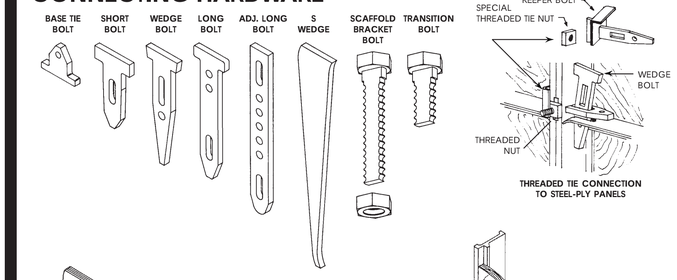

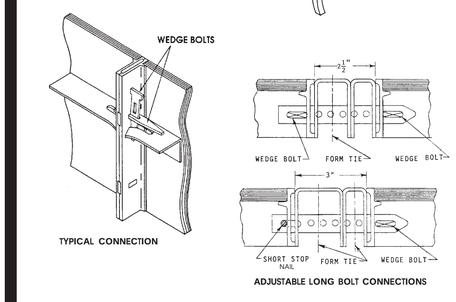

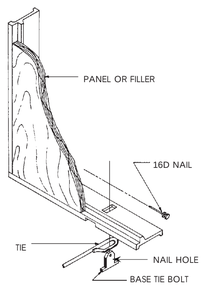

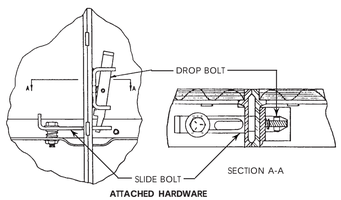

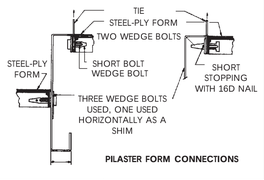

TIES

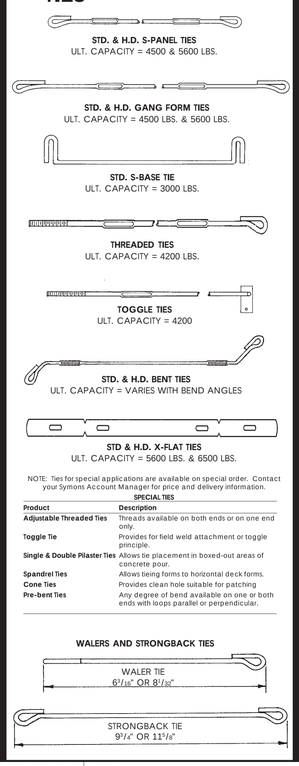

NOTE: Ties for special applications are available on special order. Contact your Symons Account Manager for price and delivery information.

SPECIAL TIES

Product	Description
Adjustable Threaded Ties	Threads available on both ends or on one end only.
Toggle Tie	Provides for field weld attachment or toggle principle.
Single & Double Pilaster Ties	Allows tie placement in boxed-out areas of concrete pour.
Spandrel Ties	Allows tieing forms to horizontal deck forms.
Cone Ties	Provides clean hole suitable for patching
Pre-bent Ties	Any degree of bend available on one or both ends with loops parallel or perpendicular.

HANDSET ALIGNING

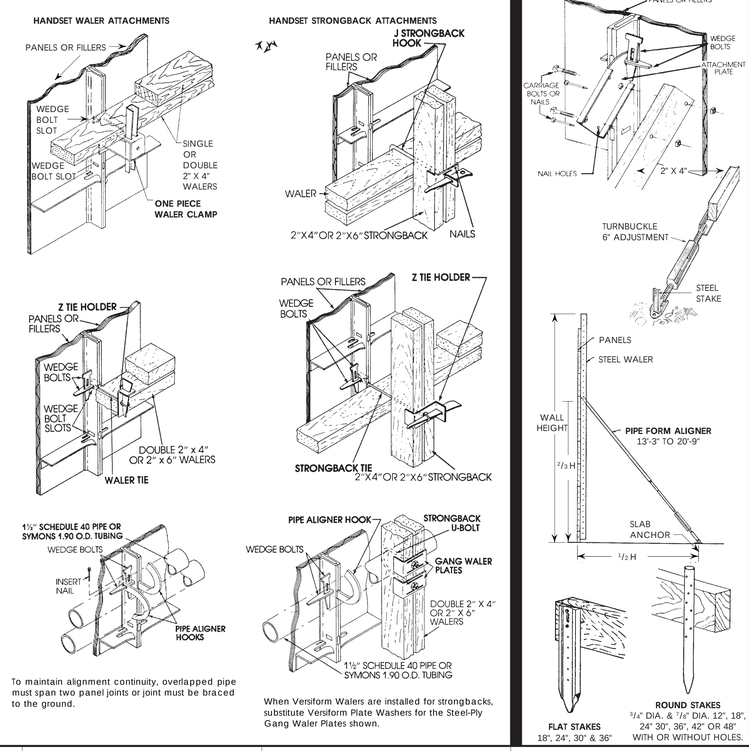

To maintain alignment continuity, overlapped pipe must span two panel joints or joint must be braced to the ground.

When Versiform Walers are installed for strongbacks, substitute Versiform Plate Washers for the Steel-Ply Gang Waler Plates shown.

ALIGNMENT

MISCELLANEOUS COMPONENTS

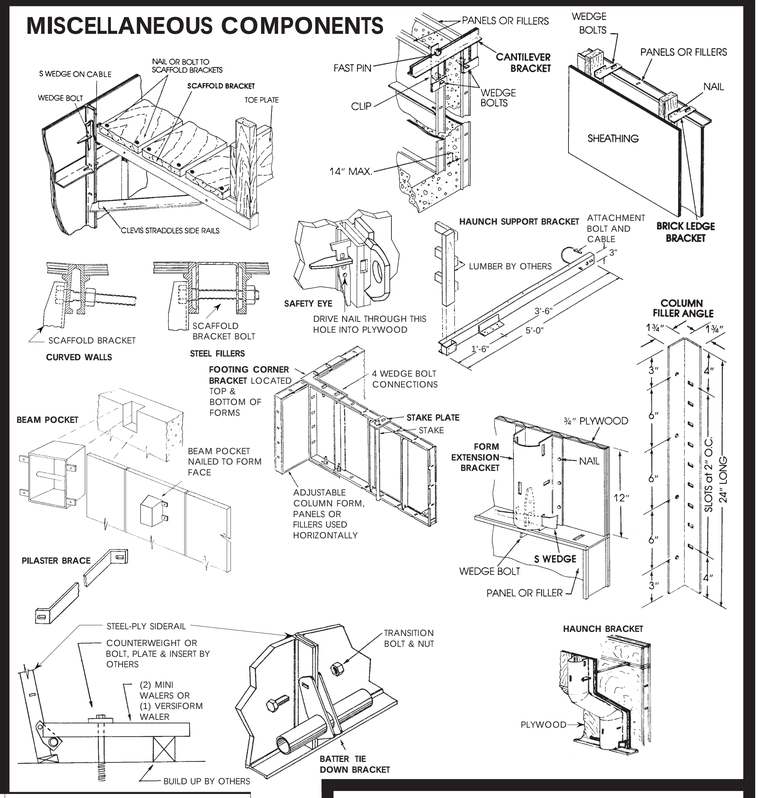

Product	Code	Weight (lbs.)	Product	Code	Weight (lbs.)	Product	Code	Weight (lbs.)	Product	Code	Weight (lbs.)	Product	Code	Weight (lbs.)	Product	Code	Weight (lbs.)	Product	Code	Weight (lbs.)
Wedge bolt	60058	0.12	Scaffold bracket bolt	42121	0.1	One piece waler clamp	60318	1.8	Pipe aligner hook	60091	0.25	Turnbuckle (aligner plate)	40103	10	J-strongback hook (4x4)	40040	1.5	Beam pocket	60184	4.1
Short bolt	60049	0.11	Transition bolt	40057	0.1	Z tie holder	60056	0.77	Strongback U-bolt	60137	0.75	Attachment plate	41400	1.7	J-strongback hook (4x6)	40038	1.5	Footing corner bracket	60118	4.4
Long bolt	60052	0.18	5/8" nut	36085	0.1	Waler tie (2x4)	60062	0.13	Gang waler plate	42116	0.57	Pipe form aligner	33697	111	Form extension bracket	41600	1.72	Stake plate	60190	.47
S-wedge	60050	0.16	Threaded tie nut	40338	0.1	Waler tie (2x6)	60063	0.14	Versiform plate washer (2 1/2"x6"x3/8")	33206	1.3	Cantilever bracket	40600	12	Stoop form (4 pc. set)	30101	280	Pilaster brace	60402	3.1
Base tie bolt	60087	0.05	Keeper bolt	40110	0.2	Strongback tie (4x4)	60059	0.17	1 1/2" schedule 40 pipe (straight) x 20'	60025	54.4	Cantilever clip	40106	2.0	Safety eye	60031	.7	Batter tie down bracket	60122	2.5
Adj. long bolt	40408	0.19	Attached hardware kit	31641	-	Strongback tie (4x6)	60060	0.19	1 1/2" schedule 40 pipe (curved) x 20'	60026	54.4	1/2" x 1" fast pin	36136	.13	Scaffold bracket	40300	15	Haunch support bracket	40417	23.5

Product	Code	Weight (lbs.)
Brick ledge bracket	41800	.54
Column filler angle	48000	4.0
Form fix/hardener	43127	23.5
1/2" contour nut (for U-bolt)	31616	.04
Bulkhead bar	10060	6.8
3/4" x 8' rubber chamfer	42150	-

SYMONS
200 E. Touhy Ave., P.O. Box 5018
Des Plaines, IL 60017-5018
847/298-3200 • FAX 847/635-9287
www.symons.com • info@symons.com

© 2005, Symons Corporation
Printed in U.S.A.
Product Code No. 99778